SIDE PLATE

ALL HOLES 8mm
CLOSE FIT
EXCEPT WHERE
NOTED

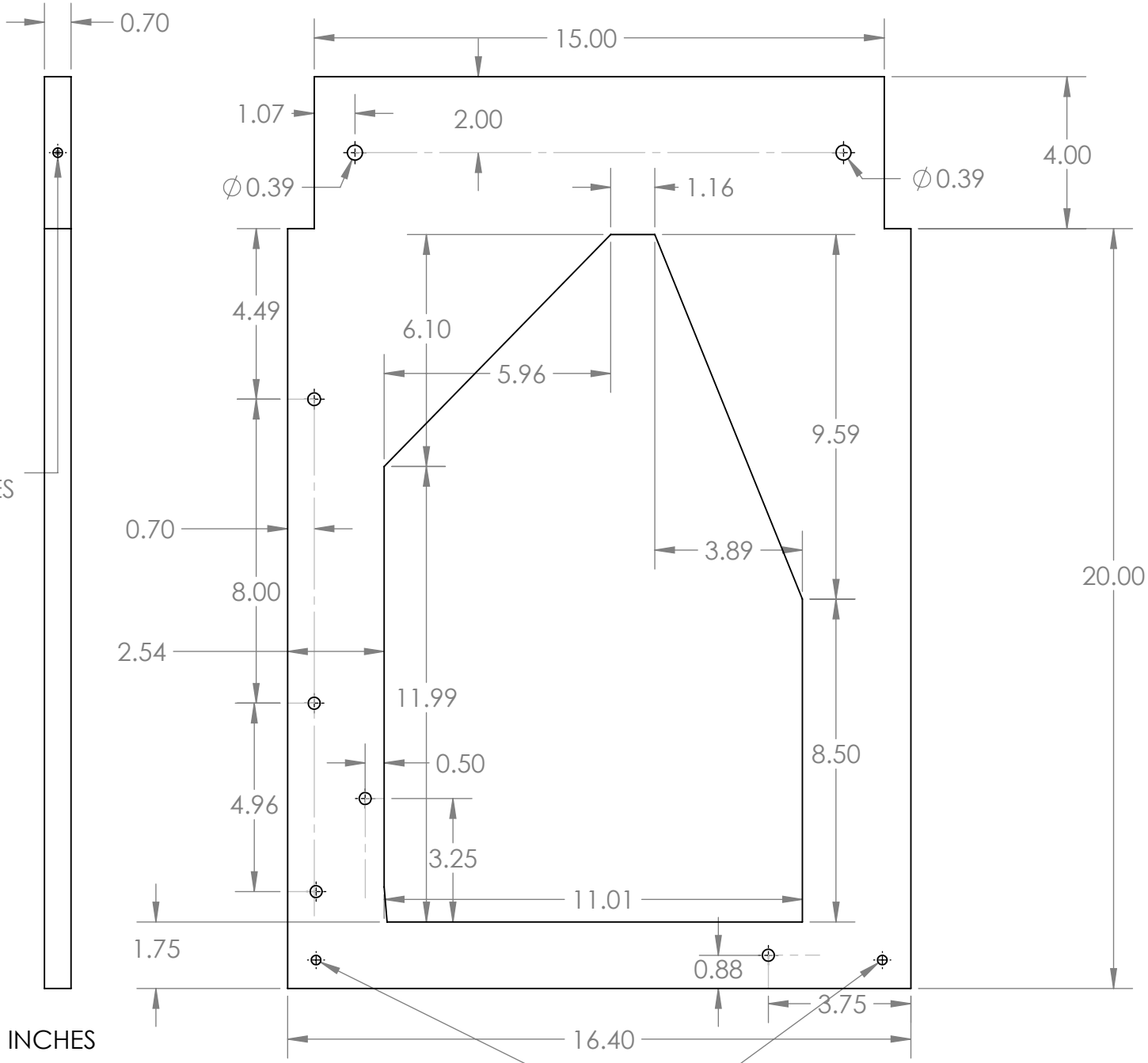

ALL DIMENSIONS IN INCHES

PUBLIC DOMAIN

1/4-20 CLEARANCE, 0.75 FROM EITHER EDGE

1/4-20 CLEARANCE, 0.75 FROM EITHER EDGE